N-bit ring counter in VHDL

This VHDL project is to implement a parameterized N-bit switch tail ring counter using VHDL. VHDL code for parameterized ring counter is presented in this project.
It means that users can easily change the number of bits of the ring counter without modifying VHDL code inside the ring counter. There is a parameter N to define the number of bits of the ring counter, and when we want to change the number of bits, just change the parameter N and re-synthesize or simulate.

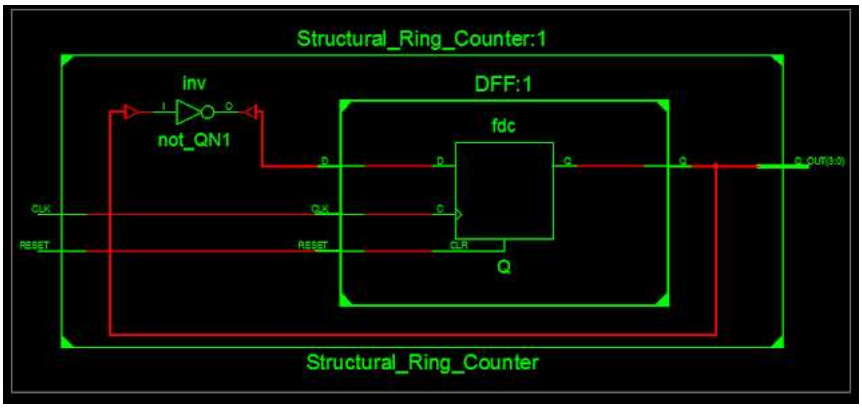

The parameterized N-bit ring counter is implemented using both behavior and structural code and very easy for students to understand and develop. The structural VHDL code of the parameterized N-bit ring counter is implemented using Generate statement. The main component of the ring counter is D-Flip-Flop.
VHDL code for D Flip-Flop:

```
library IEEE;
use IEEE.STD_LOGIC_1164.ALL;
-- fpga4student.com FPGA projects, VHDL projects, Verilog projects
-- VHDL project: VHDL code for ring counter
-- VHDL code for DFF
entity DFF is
   port(
      Q : out std_logic;      -- Data output
      CLK :in std_logic;      -- Clock input
      RESET :in std_logic;  -- Synchronous reset input
      D :in  std_logic      -- Data input
   );
end DFF;
architecture Behavioral of DFF is  --architecture of the circuit.
begin  --"begin" statement for architecture.
process(CLK,RESET) --process with sensitivity list.
begin  --"begin" statment for the process.
 if (RESET = '1') then-- asynchronous reset
         Q <= '0';
 elsif( rising_edge(CLK) ) then
          Q <= D;
      end if;
end process;  --end of process statement.
end Behavioral;
```

The above DFF has one asynchronous reset pin which is to reset the state of the DFF at anytime. It means that it does not need to wait for the rising edge of the clock.
VHDL code for ring counter using behavioral modelings:

```
library IEEE;
use IEEE.STD_LOGIC_1164.ALL;
-----------------------------------------
---- N bit switch tail ring counter ------
```

```
-----------------------------------------
-- Behavior
-- fpga4student.com FPGA projects, VHDL projects, Verilog projects
-- VHDL project: VHDL code for ring counter
entity Behavior_Ring_Counter is
generic ( N : integer:=4 );
port (
 CLK: in std_logic; -- clock
 RESET: in std_logic; -- reset
 Q_OUT: out std_logic_vector(N-1 downto 0) -- output

 );
end Behavior_Ring_Counter;
-- fpga4student.com FPGA projects, VHDL projects, Verilog projects
architecture Behavioral of Behavior_Ring_Counter is
signal not_QN: std_logic;
signal Q : std_logic_vector(N-1 downto 0):=(others => '0');
begin
not_QN <= not Q(N-1);
process(CLK,RESET)
begin
 if(RESET='1') then -- asynchronous reset
 Q <= (others => '0');
 elsif(rising_edge(CLK)) then
 Q <= Q(N-2 downto 0) & not_QN; -- Switch TAil ring counter
 end if;
end process;
Q_OUT <= Q;
end Behavioral;
```

Another version of the parameterized N-bit ring counter is the following structural VHDL code using GENERATE statement.

VHDL code for ring counter using structural modelings:

```
-- fpga4student.com FPGA projects, VHDL projects, Verilog projects
-- VHDL project: VHDL code for ring counter
library IEEE;
use IEEE.STD_LOGIC_1164.ALL;
-----------------------------------------
---- N bit switch tail ring counter ------
-----------------------------------------
-- STructurally
entity Structural_Ring_Counter is
generic ( N : integer:=4 );
port (
 CLK: in std_logic; -- clock
 RESET: in std_logic; -- reset
 Q_OUT: out std_logic_vector(N-1 downto 0) -- output

 );
end Structural_Ring_Counter;

architecture structural of Structural_Ring_Counter is
-- fpga4student.com FPGA projects, VHDL projects, Verilog projects
signal not_QN: std_logic;
signal D,Q : std_logic_vector(N-1 downto 0):=(others => '0');
begin
-- fpga4student.com FPGA projects, VHDL projects, Verilog projects
 N_BIT_Ring_counter : for i in 0 to N-1 generate
    begin
        F0 : if ( i = 0 ) generate   -- First DFF
            begin U1 : entity work.DFF port map
            (
```

```
 Q => Q(0),
 CLK => CLK,
 RESET => RESET,
 D => not_QN
 );
 end generate F0;
        F1 : if ( i /= 0 ) generate  -- The rest of DFFs
            begin U2 : entity work.DFF port map
 (
 Q => Q(i),
 CLK => CLK,
 RESET => RESET,
 D => Q(i-1)
 );
 end generate F1;
    end generate N_BIT_Ring_counter;
  not_QN <= not Q(N-1);
  Q_OUT <= Q;
end structural;
```

A VHDL testbench is also provided to verify the operation of the above code.

VHDL testbench code for ring counter:

```
LIBRARY ieee;
USE ieee.std_logic_1164.ALL;
-- fpga4student.com FPGA projects, VHDL projects, Verilog projects
-- VHDL project: VHDL code for ring counter
-- VHDL Testbench code for ring counter
ENTITY tb_counter IS
END tb_counter;

ARCHITECTURE behavior OF tb_counter IS

    -- Component Declaration for the Unit Under Test (UUT)

    COMPONENT Structural_Ring_Counter
  GENERIC
 ( N : integer:=5);
    PORT(
         CLK : IN  std_logic;
         RESET : IN  std_logic;
         Q_OUT : OUT  std_logic_vector(4 downto 0)
        );
    END COMPONENT;


   --Inputs
   signal CLK : std_logic := '0';
   signal RESET : std_logic := '0';

  --Outputs
   signal Q_OUT : std_logic_vector(4 downto 0);

   -- Clock period definitions
   constant CLK_period : time := 10 ns;

BEGIN
-- fpga4student.com FPGA projects, VHDL projects, Verilog projects
 -- Instantiate the Unit Under Test (UUT)
   uut: Structural_Ring_Counter
 generic map
 (
 N => 5-- change number of bits here
 )
```

```
 PORT MAP (
          CLK => CLK,
          RESET => RESET,
          Q_OUT => Q_OUT
        );

   -- Clock process definitions
   CLK_process :process
   begin
 CLK <= '0';
 wait for CLK_period/2;
 CLK <= '1';
 wait for CLK_period/2;
   end process;


   -- Stimulus process
   stim_proc: process
   begin
      -- hold reset state for 100 ns.
 RESET <= '1';
      wait for 100 ns;
 RESET <= '0';
      wait for CLK_period*10;

      -- insert stimulus here

      wait;
   end process;

END;
```

As we can see from the testbench, to change the number of bits of the ring counter, just modify the input parameter N and re-simulate.

Simulation result for the ring counter:

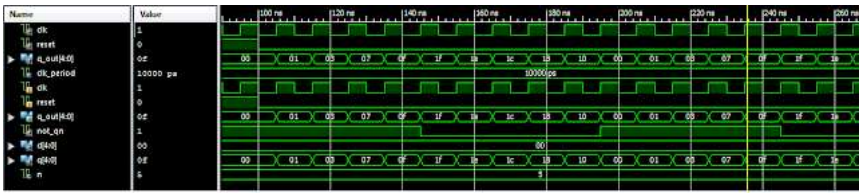

Both behavior and structural VHDL code are synthesizable. Below are the RTL Schematic for the behavioral modeling ring counter.

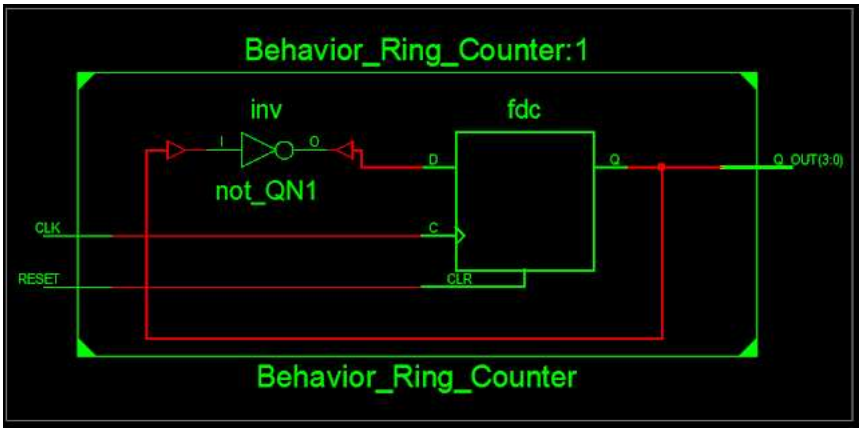

The RTL Schematic is synthesized by Xilinx ISE.

Recommended VHDL projects:

1. What is an FPGA? How VHDL works on FPGA
2. VHDL code for FIFO memory
3. VHDL code for FIR Filter
4. VHDL code for 8-bit Microcontroller
5. VHDL code for Matrix Multiplication
6. VHDL code for Switch Tail Ring Counter
7. VHDL code for digital alarm clock on FPGA
8. VHDL code for 8-bit Comparator
9. How to load a text file into FPGA using VHDL
10. VHDL code for D Flip Flop
11. VHDL code for Full Adder
12. PWM Generator in VHDL with Variable Duty Cycle
13. VHDL code for ALU
14. VHDL code for counters with testbench
15. VHDL code for 16-bit ALU
16. Shifter Design in VHDL
17. Non-linear Lookup Table Implementation in VHDL
18. Cryptographic Coprocessor Design in VHDL
19. Verilog vs VHDL: Explain by Examples
20. VHDL Code for Clock Divider on FPGA
21. How to generate a clock enable signal instead of creating another clock domain
22. VHDL code for debouncing buttons on FPGA
23. VHDL code for Traffic light controller
24. VHDL code for a simple 2-bit comparator
25. VHDL code for a single-port RAM
22. VHDL code for debouncing buttons on FPGA
23. VHDL code for Traffic light controller
24. VHDL code for a simple 2-bit comparator
25. VHDL code for a single-port RAM
26. VHDL code for Car Parking System using FSM
27. VHDL coding vs Software Programming
28. VHDL code for MIPS Processor
29. VHDL code for Moore FSM Sequence Detector
30. VHDL code for Seven-Segment Display on Basys 3 FPGA

DMCA PROTECTED

Privacy Policy | Disclaimer | Sitemap | Contact | Advertise Here
Copyright © 2016-2020 FPGA4student.com All Rights Reserved.